TECHNICAL DATA

Single Phase Motors-Aluminum Frame - PSPML90L4 B3

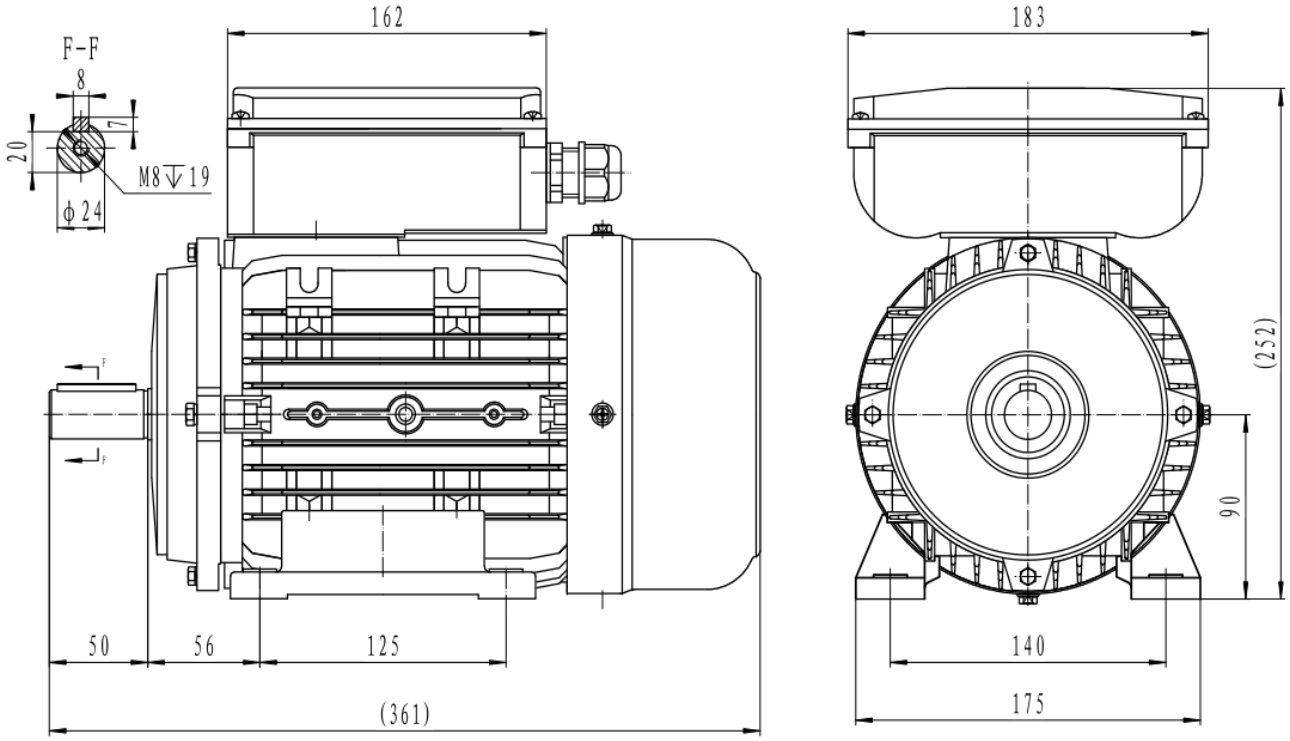

Type	**PSPML90L4**
Frame Size	**90**
Capacity	**1.5kW**
Speed / Pole	**1410 RPM / 4 Pole**
Mounting Position	**IMB3**
Insulation Class	**F**
Protection Class	**IP55**
Duty Cycle	**S1 Continuous**
Temperature Rise Class	**B**
Ambient temp. (°C)	**45°C**
Cooling method	**IC411 self-Ventilated**
Power Factor COS (phi)	**0.95**
I-starting / I-nominal	**5**

Efficiency	**IE1 Efficiency**
T-starting / T-nominal	**2.5**
T-max/Tn	**1.8**
Full Load Torque	**10.16Nm**
Centrifugal switch	**Electronic centrifugal switch**
Noise	**78 dB**
Bearing DE	**6205**
Bearing NDE	**6204**
Weight (kg)	**16**
Run capacitor value	**40 µF**
Run capacitor voltage	**450V**
Start capacitor value	**200 µF**
Start capacitor voltage	**250V**

Electrical data:

Rated Power (kW)	1.5
Frequency (Hz)	50
Voltage (V)	230
Speed (RPM)	1410
Full load current (A)	8.45

Python Electric Motors Sp.z.o.o., Aleja, Pawla II 27, 00-867, Warsaw, Poland
Web: www.pythonelectricmotors.com, E-mail: info@pythonelectricmotors.com