TECHNICAL DATA

Three Phase Electric Motors-Cast iron Frame - PM3C160MB2-B5

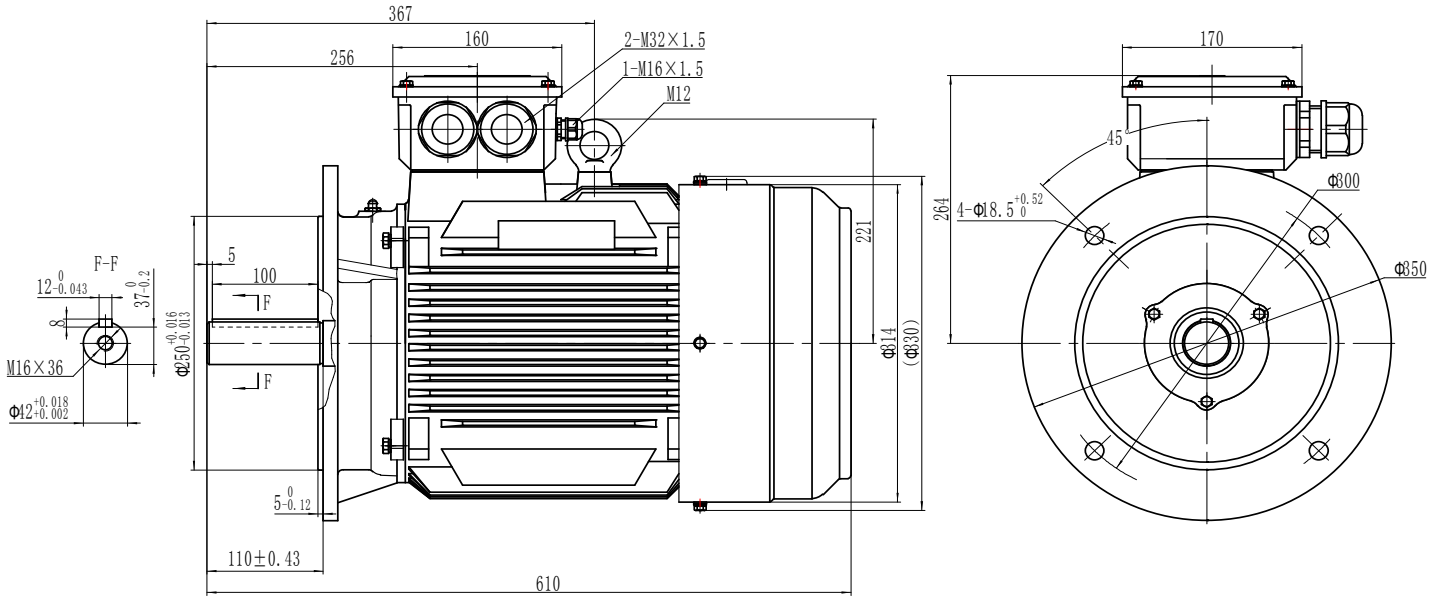

Type	**PM3C160MB2-B5**
Frame Size	**160M**
Capacity	**15 kW**
Speed / Pole	**2930 RPM / 2 Pole**
Mounting Position	**IMB5**
Insulation Class	**F**
Protection Class	**IP55**
Duty Cycle	**S1 Continuous**
Temperature Rise Class	**B**
Ambient temp. (°C)	**45°C**
Cooling method	**IC411 self-Ventilated**

Efficiency	**IE3 Premium Efficiency**
Power Factor COS (phi)	**89%**
I-starting / I-nominal	**9.9**
T-starting / T-nominal	**2.95**
T-max/Tn	**3.9**
Full Load Torque	**48.5Nm**
Thermal protection	**PTC thermistor**
Noise	**79.4 dB**
Bearing DE	**SKF 6209**
Bearing NDE	**SKF 6209**
Weight (kg)	**133**

Electrical data:

Rated Power (kW)	15		14.6		18		17.5
Frequency (Hz)	50		50		60		60
Voltage (V)	400	690	380	660	480	830	440
Speed (RPM)	2930	2930	2930	2930	3510	3510	3510
Connection	Δ	Y	Δ	Y	Δ	Y	Δ
Full load current (A)	26.5	15.3	27.3	15.7	26.5	15.3	27.3

Python Electric Motors Sp.z.o.o., Aleja, Pawla II 27, 00-867, Warsaw, Poland
Web: www.pythonelectricmotors.com, E-mail: info@pythonelectricmotors.com