TECHNICAL DATA

Three Phase Electric Motors-Cast iron Frame - PM2C180M2-B35

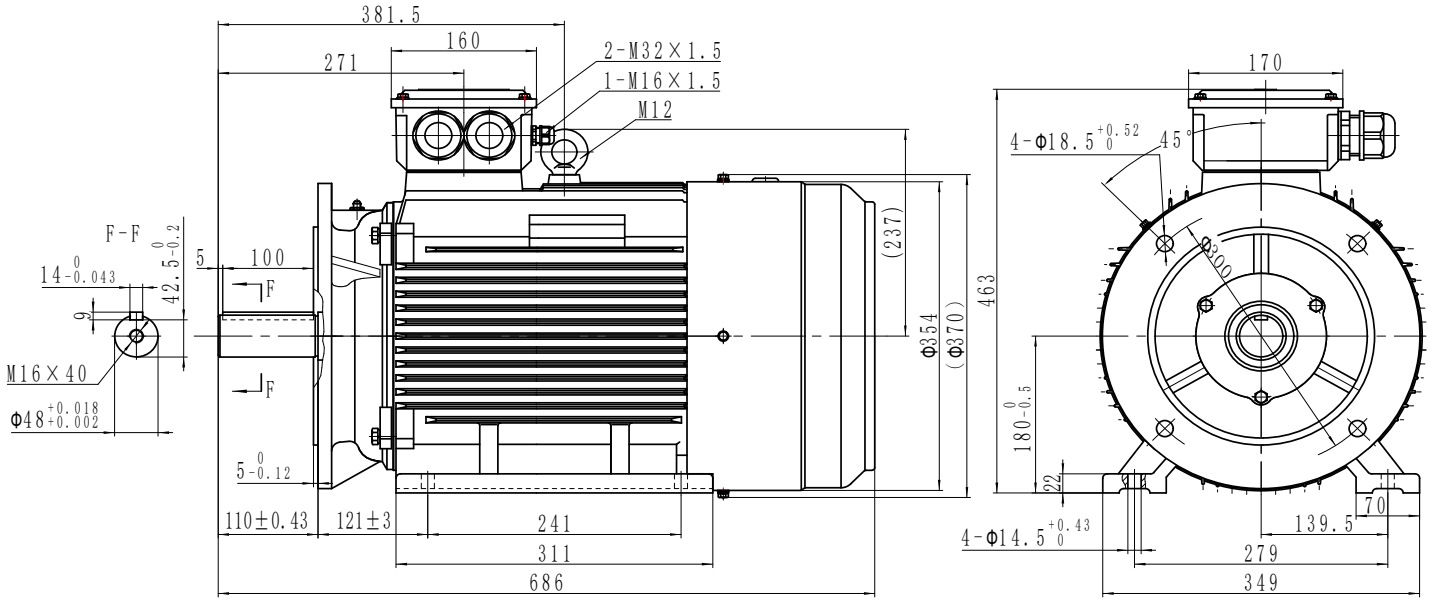

Type	**PM2C180M2-B35**
Frame Size	**180M**
Capacity	**22kW**
Speed / Pole	**2940 RPM / 2 Pole**
Mounting Position	**IMB35**
Insulation Class	**F**
Protection Class	**IP55**
Duty Cycle	**S1 Continuous**
Temperature Rise Class	**B**
Ambient temp. (°C)	**45°C**
Cooling method	**IC411 self-Ventilated**

Efficiency	**IE2 Efficiency (91.3%)**
Power Factor COS (phi)	**89%**
I-starting / I-nominal	**8.2**
T-starting / T-nominal	**2.2**
T-max/Tn	**2.3**
Full Load Torque	**70.9Nm**
Thermal protection	**PTC thermistor**
Noise	**71dB**
Bearing DE	**SKF 6211**
Bearing NDE	**SKF 6211**
Weight (kg)	**203**

Electrical data:

Rated Power (kW)	22		21.3		26.4		25.6
Frequency (Hz)	50		50		60		60
Voltage (V)	400	690	380	660	480	830	440
Speed (RPM)	2940	2940	2940	2940	3530	3530	3530
Connection	Δ	Y	Δ	Y	Δ	Y	Δ
Full load current (A)	39	22.6	40	23	39	22.6	42

Python Electric Motors Sp.z.o.o., Aleja, Pawla II 27, 00-867, Warsaw, Poland
Web: www.pythonelectricmotors.com, E-mail: info@pythonelectricmotors.com