TECHNICAL DATA

Three Phase Electric Motors-Aluminum Frame – PM1A56C4

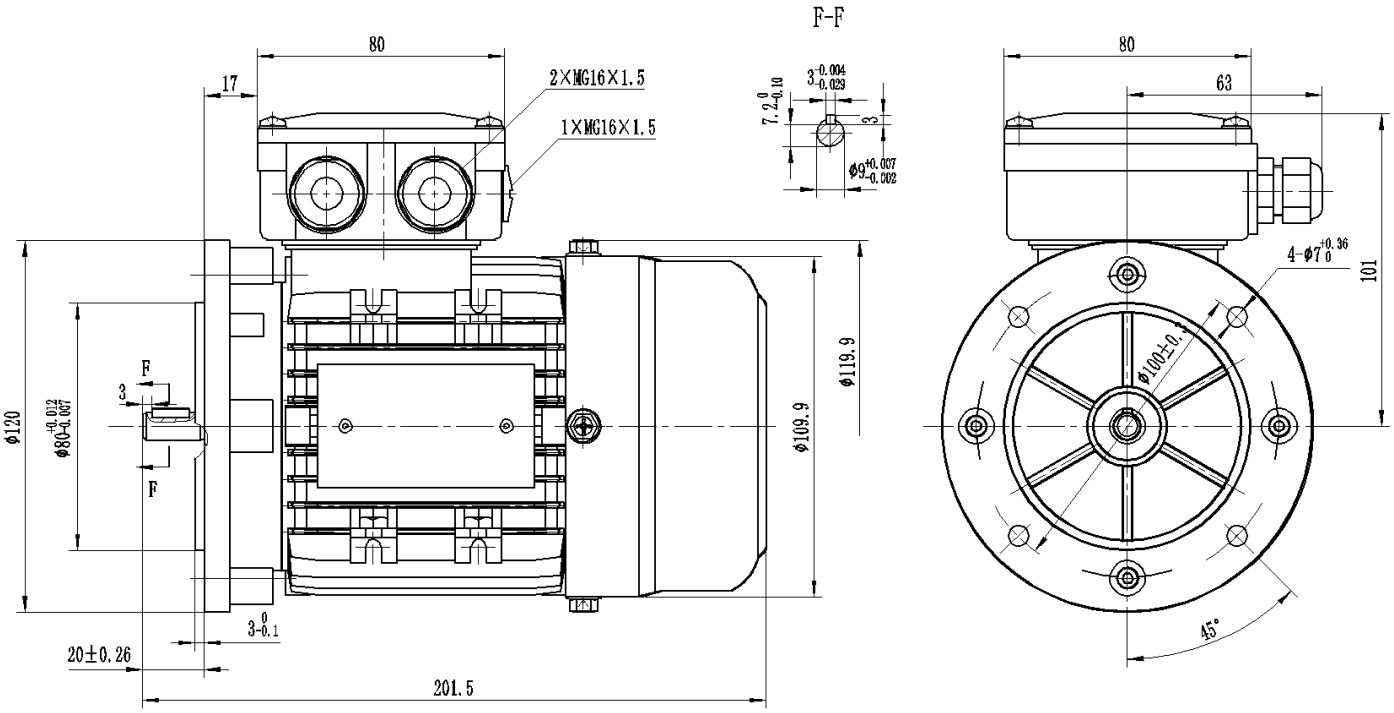

Type	**PM1A56C4 PTC**
Frame Size	**56**
Capacity	**0.12kW**
Speed / Pole	**1350 RPM / 4 Pole**
Mounting Position	**IMB5**
Insulation Class	**F**
Protection Class	**IP55**
Duty Cycle	**S1 Continuous**
Temperature Rise Class	**B**
Ambient temp. (˚C)	**45˚C**
Cooling method	**IC411 self-Ventilated**

Efficiency	**IE1 Efficiency**
Power Factor COS (phi)	**63%**
I-starting / I-nominal	**6.0**
T-starting / T-nominal	**2.2**
T-max/Tn	**2.4**
Full Load Torque	**0.85Nm**
Thermal protection	**PTC thermistor**
Noise	**52dB**
Bearing DE	**SKF 6201 C3**
Bearing NDE	**SKF 6201 C3**
Weight (kg)	**4**

Electrical data:

Rated Power (kW)	0.12		0.12		0.14		0.14
Frequency (Hz)	50		50		60		60
Voltage (V)	230	400	220	380	276	480	440
Speed (RPM)	1350	1350	1350	1350	1620	1610	1620
Connection	Δ	Y	Δ	Y	Δ	Y	Y
Full load current (A)	0.9	0.5	0.92	0.53	0.9	0.5	0.53

Python Electric Motors Sp.z.o.o., Aleja, Pawla II 27, 00-867, Warsaw, Poland
Web: www.pythonelectricmotors.com, E-mail: info@pythonelectricmotors.com