TECHNICAL DATA

Three Phase Electric Motors-Aluminum Frame – PM1A112M8

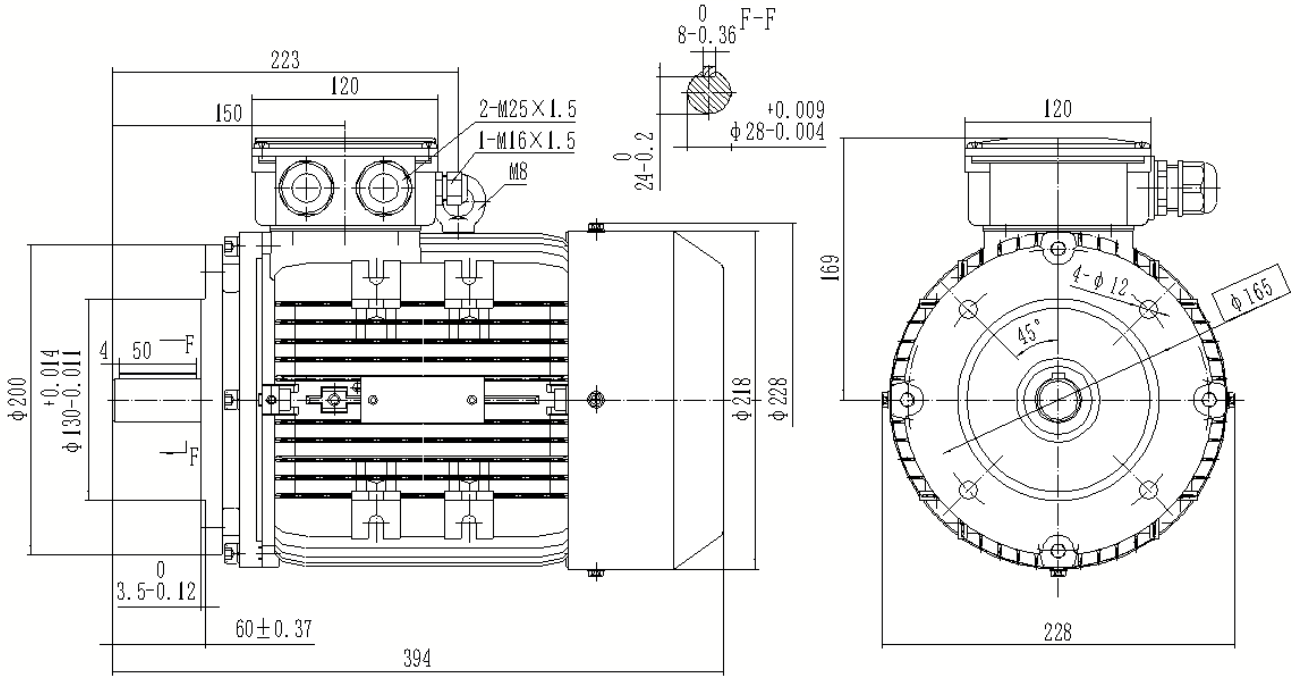

Type	**PM1A112M8 PTC**
Frame Size	**112**
Capacity	**1.5kW**
Speed / Pole	**700 RPM / 8Pole**
Mounting Position	**IMB5R**
Insulation Class	**F**
Protection Class	**IP55**
Duty Cycle	**S1 Continuous**
Temperature Rise Class	**B**
Ambient temp. (°C)	**45°C**
Cooling method	**IC411 self-Ventilated**

Efficiency	**IE1 Efficiency**
Power Factor COS (phi)	**68%**
I-starting / I-nominal	**6**
T-starting / T-nominal	**2.2**
T-max/Tn	**2.4**
Full Load Torque	**20Nm**
Thermal protection	**PTC thermistor**
Noise	**61dB**
Bearing DE	**SKF 6306 C3**
Bearing NDE	**SKF 6306 C3**
Weight (kg)	**34**

Electrical data:

Rated Power (kW)	1.5		1.46		1.7		1.7
Frequency (Hz)	50		50		60		60
Voltage (V)	230	400	220	380	276	480	440
Speed (RPM)	700	700	700	700	840	840	840
Connection	Δ	Y	Δ	Y	Δ	Y	Y
Full load current (A)	7.83	4.5	8.12	4.7	7.83	4.5	4.7

Python Electric Motors Sp.z.o.o., Aleja, Pawla II 27, 00-867, Warsaw, Poland
Web: www.pythonelectricmotors.com, E-mail: info@pythonelectricmotors.com