TECHNICAL DATA

Three Phase Electric Motors-Aluminum Frame – PM1A112M8

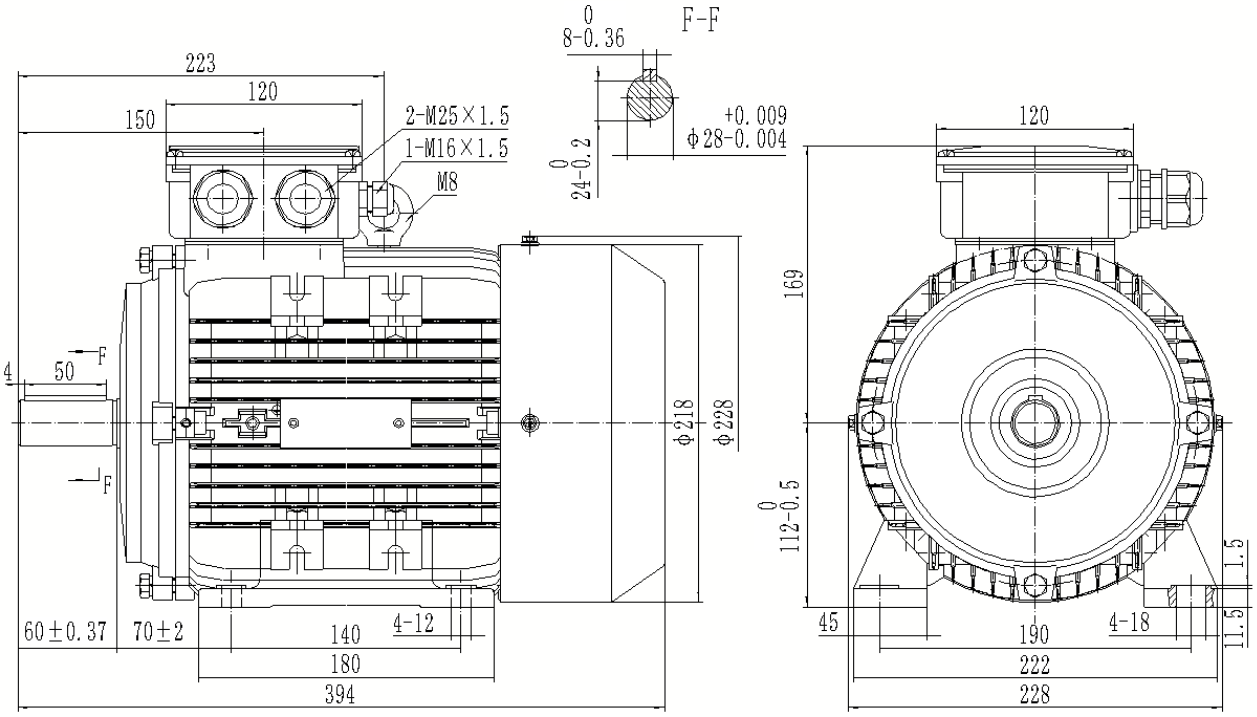

Type	**PM1A112M8 PTC**
Frame Size	**112**
Capacity	**1.5kW**
Speed / Pole	**700 RPM / 8Pole**
Mounting Position	**IMB3**
Insulation Class	**F**
Protection Class	**IP55**
Duty Cycle	**S1 Continuous**
Temperature Rise Class	**B**
Ambient temp. (°C)	**45°C**
Cooling method	**IC411 self-Ventilated**

Efficiency	**IE1 Efficiency**
Power Factor COS (phi)	**68%**
I-starting / I-nominal	**6**
T-starting / T-nominal	**2.2**
T-max/Tn	**2.4**
Full Load Torque	**20Nm**
Thermal protection	**PTC thermistor**
Noise	**61dB**
Bearing DE	**SKF 6306 C3**
Bearing NDE	**SKF 6306 C3**
Weight (kg)	**34**

Electrical data:

Rated Power (kW)	**1.5**		**1.46**		**1.7**		**1.7**
Frequency (Hz)	**50**		**50**		**60**		**60**
Voltage (V)	**230**	**400**	**220**	**380**	**276**	**480**	**440**
Speed (RPM)	**700**	**700**	**700**	**700**	**840**	**840**	**840**
Connection	**Δ**	**Y**	**Δ**	**Y**	**Δ**	**Y**	**Y**
Full load current (A)	**7.83**	**4.5**	**8.12**	**4.7**	**7.83**	**4.5**	**4.7**

Python Electric Motors Sp.z.o.o., Aleja, Pawla II 27, 00-867, Warsaw, Poland
Web: www.pythonelectricmotors.com, E-mail: info@pythonelectricmotors.com